PRESTRESSED CONCRETE, INC.

P.O. Box 311 • Newton, KS 67114
316-283-2277 • 316-283-2321(fax)

8'- 0" DOUBLE TEE
16" DEEP

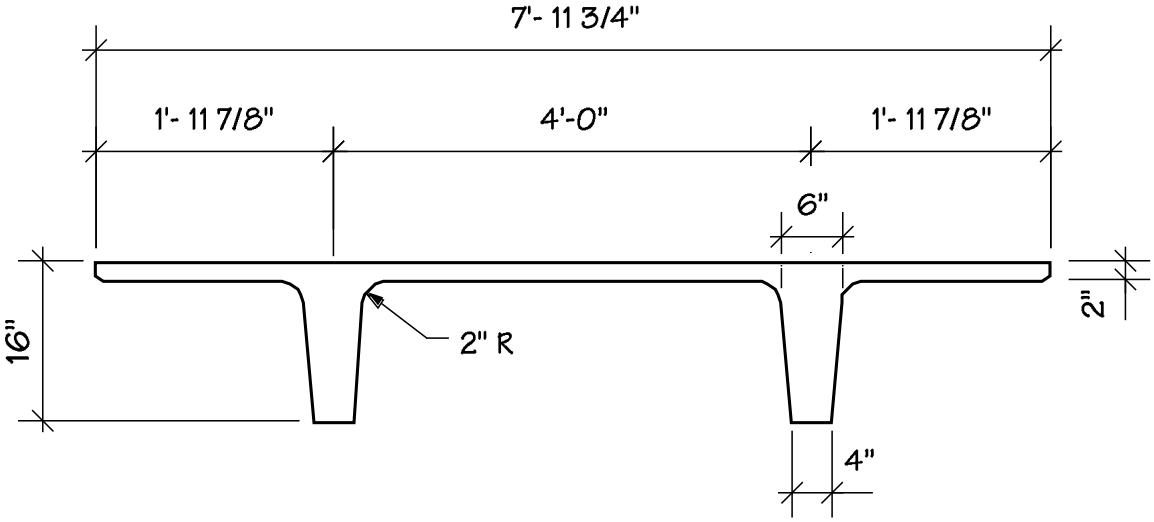

SECTION PROPERTIES

Wt. = 350 plf
A = 335 in^2
Yt = 4.16 in
Yb = 11.84 in
Sb = 585 in^3
St = 1,663 in^3
I = 6,925 in^4